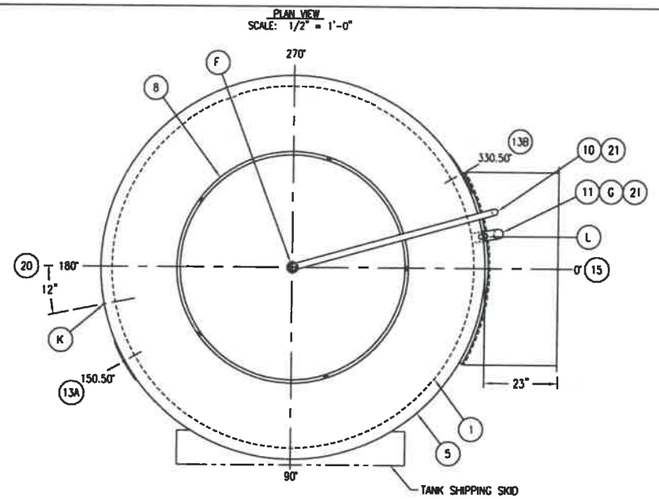

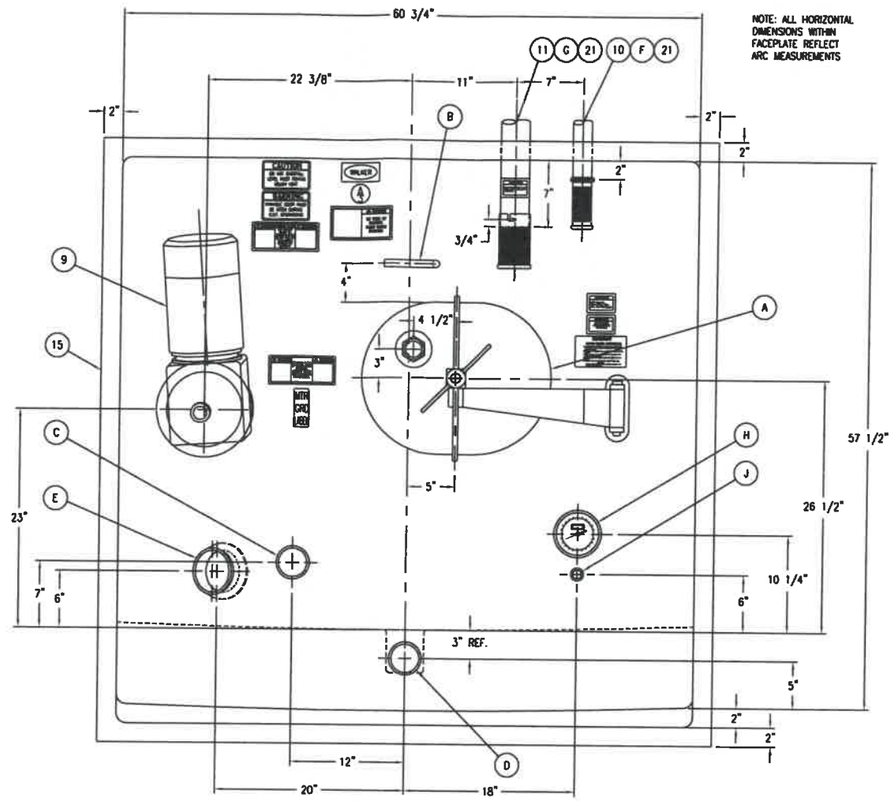

NOTE: ALL HORIZONTAL DIMENSIONS WITHIN FACEPLATE REFLECT ARC MEASUREMENTS

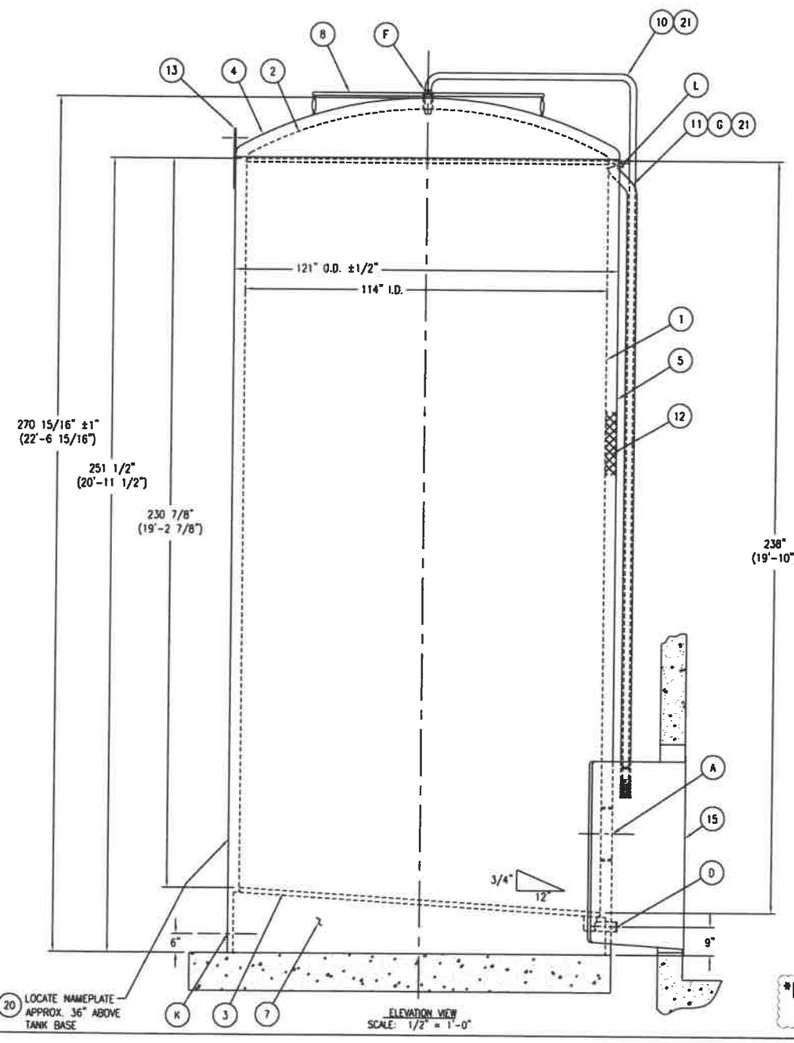

NOTE
SOME ITEMS IN ELEVATION VIEW ARE SHOWN ROTATED SEE PLAN VIEW FOR PROPER ORIENTATION

MATERIAL SCHEDULE

ITEM	REF. DWG.	QTY.	SIZE/THICK	MATERIAL	SA #	WELDS	DESCRIPTION
1	WEP-97697-HBS	1	13 GA.	304 S.S.			INNER SHELL
2	--	1	12 GA.	304 S.S.			INNER TOP HEAD (F&D) 3" K.R. - 1/2" S.F.
3	--	1	12 GA.	304 S.S.		H-08	BOTTOM HEAD (FLANGED ONLY) 1" K.R. - 1/2" S.F.
4	--	1	10 GA.	C.S.		H-02	OUTER HEAD (F&D) 3" K.R. - 1" S.F.
5	WEP-97697-4-B	1	12 GA.	C.S.			OUTER WRAP (PRIME & FINISH PAINTED)
6	10888	4	5" X 6.7#	C.S.			SHELL REINFORCING RINGS (NOT SHOWN)
7	WEP-97697-3-B	1	PER DETAIL	C.S.			SILO BOTTOM
8	CA0320110	1	PER DETAIL	304 S.S.		M-03	SAFETY RING
9	10912-B	1	3 HP., 141 RPM, 23" DIA. (4) BLADE IMP., TEFC, 230/460 VOLT	316L/304 S.S.			HORIZONTAL MECHANICAL AGITATOR W/ CIP FEATURE (SPRING DESIGN) - USDA ACCEPTED!
10	--	1	2" O.D.; 16 GA.	304 S.S.			C.I.P. PIPING
11	--	1	3" O.D.; 16 GA.	304 S.S.			VENT PIPING
12	--	A.R.	3" THK.	---			TANK INSULATION (POLYSTYRENE/FIBERGLASS)
13	10478-A	2	17" X 19", 3/8" THK.	C.S.		L-01	LIFTING LUGS TOP (C.S. WRAP)
14	WEP-97697-3-B	2	3/8" C.S.	C.S.			LIFTING LUGS BOTTOM (LOCATED IN SILO BOTTOM)
15	10639-D	1	13 GA (57 1/2" HG. X 18 3/4" WD X 23" DP)	304 S.S.		A-01	ALCOVE FACEPLATE W/ EXTENSION (SEE NOTE 3)
16	WEP-97697-2-C	6	PER DETAIL	304 S.S.			HOLD DOWNS - SHIPPED LOOSE (NOT SHOWN)
17	CIP0120506	1	2 - LINE STYLE	304 S.S.			C.I.P. INTERLOCK-SHIPPED LOOSE (NOT SHOWN) (SEE NOTES 9 & 11)
18	CIP0120390	1	PER DETAIL	RUBBER			C.I.P. DOOR-SHIPPED LOOSE (NOT SHOWN) (SEE NOTES 9 & 11)
19	--	A.R.	12 GA.	304 S.S.			WRAP ESCUTCHEONS
20	--	1	---	304 S.S.			NAMEPLATE
21	10525-A 10910	1	---	---			HEAT TAPE & INSULATION WITH ALUMINUM PROTECTIVE JACKETING APPLIED ON ITEMS 10 & 11

NOZZLE SCHEDULE

ITEM	REF. DWG.	QTY	MATERIAL STUB	MATERIAL SA #	MATERIAL FLANGE	MATERIAL SA #	SIZE	RATE	WELDS	DESCRIPTION
A	10085 REF.	1	316L/304 S.S.	---		---	16" X 20"		M-01	MANHOLE (WITH NEOPRENE HT-3C GASKET & OMI ASEPTIC SAMPLER PORT W/ NUT)
B	MHY0441400	1	304 S.S.	---		---	3/4" X 6" LG.		M-07	HAND GRIP
C	INL0380026	1	316L S.S.	---		---	3"		I-01	INLET (#14 TRI-CLAMP CONN.)
D	OUT0480041	1	316L/304 S.S.	---		---	3"		O-02	OUTLET (#14 TRI-CLAMP CONN. ON SUMP TYPE POD)
E	---	1	316L S.S.	---		---			G-04	LEVEL GAUGE (TAYLOR ABB 6" SANITARY TANK SPUD FOR LEVEL SENSOR, SCHERPING PART #SF23559)
F	10507 10908	1	16 GA. 304 S.S.	---		---	3"/2"		C-01	C.I.P. (KLENZADE SD-6, 2" #14 TRI-CLAMP CONN. IN ALCOVE W/VENT SCREEN, PIPING TO ALCOVE INCLUDED) (SEE NOTES 8 & 9)
G	10908	1	16 GA. 304 S.S.	---		---	3"			AIR VENT (45° ELBOW AT TOP HEAD SEAM, 3" BAYONET CONN. IN ALCOVE W/ VENT SCREEN, PIPING TO ALCOVE INCLUDED) (SEE NOTES 5 & 6)
H	THM0000039	1	316L S.S.	---		---	1/2" NPT		W-01	THERMOMETER (5" DIAL, 20-240°F RANGE W/PROJECTILE WELL)
J	THM0004896	1	316L S.S.	---		---	1 1/4" 18NEF		W-01	RECORDER WELL (WALKER PROJECTILE WELL- EQUIVALENT TO TAYLOR #26P397 & ANDERSON #41247)
K	---	1	NYLON	---		---	5/8" DIA.			LEAK DETECTOR/ VENT PLUG
L	---	1	304 S.S.	---		---	1 1/2"			HIGH LEVEL CONTROL (#14 TRI-CLAMP CONNECTION FOR CUSTOMER SUPPLIED & INSTALLED HIGH LEVEL CONTROL BASED ON A 12" LUMENITE PROBE TO SENSE PRODUCT 1/2" BELOW VENT LEVEL)

WARRANTY

Walker Stainless Equipment Co. warrants new tanks or equipment manufactured by us to be free from defects in material and workmanship under normal use and service for a period of (3) years after shipment from the factory.

For breach of warranty of any kind, the measure of damages to be recoverable from Walker Stainless Equipment Co. shall be limited to repair or replacement of the part or equipment which examination discloses to be the satisfaction of seller to be defective, or the payment of the price or making such repair or replacement, at the option of the seller.

This warranty is expressly in lieu of all other warranties, expressed or implied, and all other obligations and liabilities on our part. Any warranty of merchantability is expressly excluded. We neither assume nor authorize any other persons to assume for us any liability in connection with the sale of our products, and no other warranty will be honored unless in writing and signed by an officer of the corporation. This warranty shall not apply to any product of our manufacture which has been repaired or altered outside our factory, or which in our opinion, has been subject to misuse, negligence or accident. Seller will not assume any charges for liability or responsibility for transportation to and from repair point, nor any loss of time due to repair. This warranty does not cover components of other manufacturers beyond such warranty as is made by such manufacturer.

Any action for breach of warranty shall be commenced within one (1) year of said breach or be forever barred.

All information including design details and dimensions contained hereon are confidential and proprietary and must not be reproduced, disclosed to others, or used in the production of parts shown, unless authorized in writing by Walker Stainless Equipment Company.

NOTES:
1. Dimensions, unless otherwise indicated are nominal and standard shop tolerances are to be expected. Measurements for any field attachments should be verified on site by others before fabrication of the attachments.
2. If used in contact with materials containing salt, chlorides or other corrosive materials, the corrosion resistance of this equipment is not the responsibility of Walker Stainless Equipment Company.

REV.	DATE	ISSUE	REVISION DESCRIPTION	REV. BY

SPECIAL NOTES:
1. CONCRETE BASE MUST BE FLAT AND LEVEL WITHIN 1/16". IF BASE FLATNESS IS IN EXCESS OF THIS TOLERANCE, SHIMS MAY BE REQUIRED BETWEEN TANK SUPPORT BEAMS AND CONCRETE BASE. CHECK CONCRETE BASE FOR COMPLIANCE WITH FLATNESS TOLERANCE PRIOR TO TANK ERECTION. TANK BASE AND SUPPORT BEAMS HAVE BEEN INSPECTED PRIOR TO SHIPMENT TO INSURE THAT SUPPORT BEAM CONTACT SURFACES ARE WITHIN 1/8" OF PLANE OF SUPPORT. INSPECT TANK BASE PRIOR TO ACCEPTANCE FROM DELIVERING CARRIER TO INSURE THAT THEY HAVE NOT BEEN DAMAGED IN TRANSIT.
2. ALL NOZZLES TO BE COVERED WITH PLASTIC OR PLYWOOD FOR SHIPMENT.
3. ALCOVE EXTENSION TO BE ~~FACTORY WELDED.~~ Alcove to be shipped loose RJD
4. ALL WELDS TO BE FULL PENETRATION & CONTINUOUS, UNLESS NOTED OTHERWISE.
5. MAXIMUM FILL OR EMPTY RATE 400 G.P.M.
6. TANK IS DESIGNED FOR ATMOSPHERIC PRESSURE. DO NOT OVERFILL SILO TANK. TANK DAMAGE DUE TO OVERFILLING WILL NOT BE WARRANTED.
7. EXPOSED INSIDE EDGES OF NOZZLES OR MANHOLES SHALL BE SMOOTH & CORNERS CHAMFERED OR ROUNDED.
8. C.I.P. SOLUTION REQUIREMENTS: 90 GPM AT 20 PSIG AT TOP SPRAY UNIT.
9. MANWAY DOOR MUST BE OPEN WITH C.I.P. DOOR IN PLACE DURING C.I.P. OPERATIONS. FAILURE TO DO SO MAY/WILL RESULT IN TANK DAMAGE AND VOIDS WARRANTY.
10. THIS VESSEL IS DESIGNED AND MANUFACTURED TO COMPLY WITH 3A STANDARD 22-08.
11. (1) C.I.P. DOOR AND (1) C.I.P. INTERLOCK UNIT FURNISHED FOR USE W/ (2) TANKS.

POP RIVET (4) PLACES (20)

SERIAL NO. *
DATE
CAPACITY 10,000 GALLON
MODEL VSHT / 304 S.S.
WALKER STAINLESS EQUIPMENT CO. LLC
3A 22-08

*WEP-97697
WEP-97699

FABRICATION TO BEGIN UPON RECEIPT OF APPROVED DRAWINGS. TO MAINTAIN OUR DELIVERIES, AND CUSTOMER RELATIONSHIPS, WE RESERVE THE RIGHT TO EVALUATE REQUESTED CHANGES WHICH COULD AFFECT OUR PRODUCTION SCHEDULE. THEREFORE REQUEST "NO CHANGES" WITHIN (2) WEEKS PRIOR TO SCHEDULED SHIP DATE.

STANDARD INFORMATION:

ASME:	NO
DESIGN PRESSURE & TEMP.:	VESSEL: ATMOSPHERIC @ AMBIENT JACKET: NONE
HYDRO TEST AT AMBIENT:	VESSEL: NONE JACKET: N/A
CORROSION ALLOWANCE:	NONE
PASSIVATION REQ'D.:	BY OTHERS
SHOP TOLERANCE:	±1/8"
RADIOGRAPH:	NO
N.D.E.	DYE CHECK/ LIQUID PENETRANT
P.W.H.T.:	NO
TANK CONTENTS:	PASTEURIZED WHEY @ 6% TOTAL SOLIDS (300 CPS MAX.)
SP. GR.:	1.06 (MAX.)
APPROX. EMPTY WEIGHT:	11,775 LBS.

FINISH:
INTERIOR: 304 S.S. SURFACES - #4 SANITARY FINISH (3A STANDARD-Ra RANGE 23-32)
WELDS - F-6 (GROUND SMOOTH & FLUSH TO #4 SANITARY FINISH) (3A STANDARD-Ra RANGE 23-32)
EXTERIOR: C.S. SURFACES- CHEMICALLY CLEANED & PRIME PAINTED WITH "TUFCOTE" GRAY PRIMER & FINISH PAINTED WITH (2) COATS WHITE "IMRON" PREMIUM POLYURETHANE
ALCOVE INTERIOR: 304 S.S. SURFACES - #4 SANITARY FINISH (3A STANDARD-Ra RANGE 23-32)
WELDS - F-6; (GROUND SMOOTH & FLUSH TO A #4 SANITARY FINISH) (3A STANDARD-Ra RANGE 23-32)
ALCOVE FITTINGS: 316L/304 S.S. SURFACES - #4 SANITARY FINISH (3A STANDARD-Ra RANGE 23-32)
WELDS - F-58 (GROUND SMOOTH & FLUSH W/ BRIGHT BUFF FINISH)

CRATING INSTRUCTIONS: PROVIDE WOOD SKIDS ON EXTREME ENDS OF TANK FOR SHIPPING

NO. REQ'D. 2 SERIAL NO. WEP-97697 WEP-97699

WEP-97697-RJA
WEP-97699-RJA

APPROVED FOR CONSTRUCTION
BY RJD DATE 12-22-11

ROUTING	
FABRICATOR	
QUALITY CONTROL	

WALKER ENGINEERED PRODUCTS

WALKER STAINLESS EQUIPMENT CO. LLC

SCALE: 1/2"=1'-0"	CHECKED BY:	DRAWN BY:	T. STEELE
DATE: 12/15/11	APPROVED BY:	REVISED:	△

(2) 10,000 GALLON INSULATED SILO TANKS

JOB: AGR MARK/ CABOT CREAMERY MIDDLEBURY, VT
DRAWING NUMBER: WEP-97697-1-D

NOTE! DO NOT SCALE THIS DRAWING!